Copyright

This documentation and the software included with this product are copyrighted 2002 by Advantech Co., Ltd. All rights are reserved. Advantech Co., Ltd. reserves the right to make improvements in the products described in this manual at any time without notice. No part of this manual may be reproduced, copied, translated or transmitted in any form or by any means without the prior written permission of Advantech Co., Ltd. Information provided in this manual is intended to be accurate and reliable. However, Advantech Co., Ltd. assumes no responsibility for its use, nor for any infringements of the rights of third parties which may result from its use.

Acknowledgments

PC-LabCard is a trademark of Advantech Co., Ltd. IBM and PC are trademarks of International Business Machines Corporation. MS-DOS, Windows, Microsoft Visual C++ and Visual BASIC are trademarks of Microsoft Corporation. Intel and Pentium are trademarks of Intel Corporation. Delphi and C++ Builder are trademarks of Inprise Corporation.

CE notification

The PCI-1730/1733/1734, developed by ADVANTECH CO., LTD., has passed the CE test for environmental specifications when shielded cables are used for external wiring. We recommend the use of shielded cables. This kind of cable is available from Advantech. Please contact your local supplier for ordering information.

Note:

✎ Concerning the environment protection, we'd like to reduce the paper using for the user's manual. Starting the page of *Appendix C*, please find the PDF file of the CD-ROM.

Part No. 2003173000 1st Edition
Printed in Taiwan April 2002

Contents

1. INTRODUCTION 1

1.1 FEATURES 1
1.2 APPLICATIONS 5
1.3 INSTALLATION GUIDE 5
1.4 SOFTWARE OVERVIEW 7
1.5 DEVICE DRIVERS PROGRAMMING ROADMAP 8
1.6 ACCESSORIES 10

2. INSTALLATION 11

2.1 UNPACKING 11
2.2 DRIVER INSTALLATION 13
2.3 HARDWARE INSTALLATION 14
2.4 DEVICE SETUP & CONFIGURATION 17

3. SIGNAL CONNECTIONS 21

3.1 OVERVIEW 21
3.2 SWITCH AND JUMPER SETTINGS 21
3.3 SIGNAL CONNECTIONS 26

APPENDIX A. SPECIFICATIONS 37

APPENDIX B. BLOCK DIAGRAM 41

APPENDIX C. REGISTER STRUCTURE AND FORMAT 45

C.1 OVERVIEW 45
C.2 I/O PORT ADDRESS MAP 45
C.3 ISOLATED DIGITAL INPUT REGISTERS -- BASE+0H/1H (/2H/3H) 49
C.4 ISOLATED DIGITAL OUTPUT REGISTER- BASE+0H/1H (/2H/3H) 50
C.5 NON-ISOLATED DIGITAL INPUT REGISTERS -- BASE+2H/3H 51
C.6 NON-ISOLATED DIGITAL OUTPUT REGISTER- BASE+2H/3H 51
C.7 BOARD ID — BASE+4H 52
C.8 INTERRUPT STATUS REGISTER — BASE+8H/CH/10H 53
C.9 INTERRUPT CONTROL REGISTER — BASE+8H/CH/10H 55

1. Introduction

Thank you for buying the Advantech PCI-1730/1733/1734. The Advantech PCI-1730/1733/1734 is a 32-channel isolated digital input/output card for the PCI bus.

For easy monitoring, each isolated digital input channel is equipped with one red LED, and each isolated digital output channel is equipped with one green LED to show its ON/OFF status. The PCI-1730 and PCI-1733's isolated digital input channels are ideal for digital input in noisy environments or with floating potentials.

The PCI-1730/1733/1734 provides specific functions for different user requirements:

PCI-1730 32-channel Isolated Digital I/O Card
PCI-1733 32-channel Isolated Digital Input Card
PCI-1734 32-channel Isolated Digital Output Card

The following sections of this chapter will provide further information about features, installation guide, together with some brief information on software and accessories for the PCI-1730/1733/1734 card.

1.1 Features

PCI-1730

- ❏ Compatible as PCL-730
- ❏ 32 isolated DIO channels (16 inputs and 16 outputs)
- ❏ 32 TTL-level DIO channels (16 inputs and 16 outputs)
- ❏ High output driving capacity
- ❏ High-voltage isolation on isolated I/O channels (2,500 V_{DC})
- ❏ Interrupt handling capability
- ❏ Two 20-pin connectors for isolated digital I/O channels and two for TTL digital I/O channels
- ❏ D-type connector for isolated input and output channels
- ❏ Output status read-back

- ❏ Keep digital output values when hot system reset
- ❏ High ESD protection (2,000 V_{DC})
- ❏ High over-voltage protection (70 V_{DC})
- ❏ Wide input range (5 ~ 30 V_{DC})
- ❏ Board ID

PCI-1733

- ❏ Compatible as PCL-733
- ❏ 32 isolated Digital Input channels
- ❏ High output driving capacity
- ❏ High-voltage isolation on isolated Input channels (2,500 V_{DC})
- ❏ Interrupt handling capability
- ❏ D-type connector for isolated input channels
- ❏ High ESD protection (2,000 V_{DC})
- ❏ High over-voltage protection (70 V_{DC})
- ❏ Wide input range (5 ~ 30 V_{DC})
- ❏ Board ID

PCI-1734

- ❏ Compatible as PCL-734
- ❏ 32 isolated Digital Output channels
- ❏ High output driving capacity
- ❏ High-voltage isolation on isolated Output channels (2,500 V_{DC})
- ❏ D-type connector for isolated input and output channels
- ❏ Output status read-back
- ❏ Keep digital output values when hot system reset
- ❏ High ESD protection (2,000 V_{DC})
- ❏ Board ID

The Advantech PCI-1730/1733/1734 offers the following main features:

Fully compatible as its ISA-bus product

All the **specifications**, **connectors**, **pin-assignments**, **registries format** are the same. Users can upgrade their system into PCI bus without change any existed wiring system.

For the existed Windows application program:
Users just need to remove the PCL-730/733/734 via the 'Device Manager', then install the PCI-1730/1733/1734 for instead (the device number must be the same). After that, user's original windows application program can work with PCI-1730/1733/1734 properly.

For the existed DOS application program:
Users just need to add some statements (to get the PCI bus PCI-1730/1733/1734 card's address and IRQ information) from our PCI-1730/1733/1734 DOS example program into their original DOS application program. After that, user's original DOS application program can work with PCI-1730/1733/1734 properly.

Robust Protection

The PCI-1730/1733 digital input channels feature a robust isolation protection for industrial, lab and machinery automation applications. It durably withstands voltage up to 2,500 V_{DC}, preventing your host system from any incidental harms. If connected to an external input source with surge-protection, the PCI-1730/1733/1734 can offer up to a maximum of 2,000 V_{DC} ESD (Electrostatic Discharge) protection. Even with an input voltage rising up to 70 V_{DC}, the PCI-1730/1733 can still manage to work properly albeit only for short period of time.

Wide Input Range

The PCI-1730/1733 has a wide range of input voltage from 5 to 30 V_{DC}, and it is suitable for most industrial applications with 12 V_{DC}, 24 V_{DC} input voltage.

Reset Protection Fulfills Requirement for Industrial Applications

When the system has undergone a hot reset (i.e. without turning off the system power), the PCI-1730/1734 can either retain outputs values of each channel, or return to its default configuration as open status, depending on its on-board jumper setting. This function protects the system from wrong operations during unexpected system resets.

Plug-and-Play Function

The PCI-1730/1733/1734 is a Plug-and-Play device, which fully complies with PCI Specification Rev 2.2. During card installation, there is no need to set jumpers or DIP switches. Instead, all bus-related configurations such as base I/O address and interrupt are automatically done by the Plug-and-Play function.

Board ID

The PCI-1730/1733/1734 has a built-in DIP Switch that helps define each card's ID when multiple PCI-1730/1733/1734 cards have been installed on the same PC chassis. The board ID setting function is very useful when users build their system with multiple PCI-1730/1733/1734 cards. With correct Board ID settings, you can easily identify and access each card during hardware configuration and software programming.

Note:

✎ For detailed specifications of the PCI-1730/1733/1734, please refer to *Appendix A, Specifications.*

1.2 Applications

- ❑ Industrial ON/OFF control
- ❑ Switch status sensing
- ❑ BCD interfacing
- ❑ Digital I/O control
- ❑ Industrial and lab automation
- ❑ Laboratory & Education

1.3 Installation Guide

Before you install your PCI-1730/1733/1734 card, please make sure you have the following necessary components:

- ❑ **PCI-1730/1733/1734 card**
- ❑ **PCI-1730/1733/1734 User's Manual**
- ❑ **Driver software** Advantech DLL drivers (included in the companion CD-ROM)
- ❑ **Wiring cable** PCL-10137 (option)
- ❑ **Wiring board** PCLD-880, ADAM-3937 (option)
- ❑ **Computer** Personal computer or workstation with a PCI-bus slot (running Windows 2000/95/98/ME/NT/XP)

Some other optional components are also available for enhanced operation:

- ❑ **Application software** ActiveDAQ, GeniDAQ or other third-party software packages

After you get the necessary components and maybe some of the accessories for enhanced operation of your Multifunction card, you can then begin the Installation procedures. Figure 1-1 on the next page provides a concise flow chart to give users a broad picture of the software and hardware installation procedures:

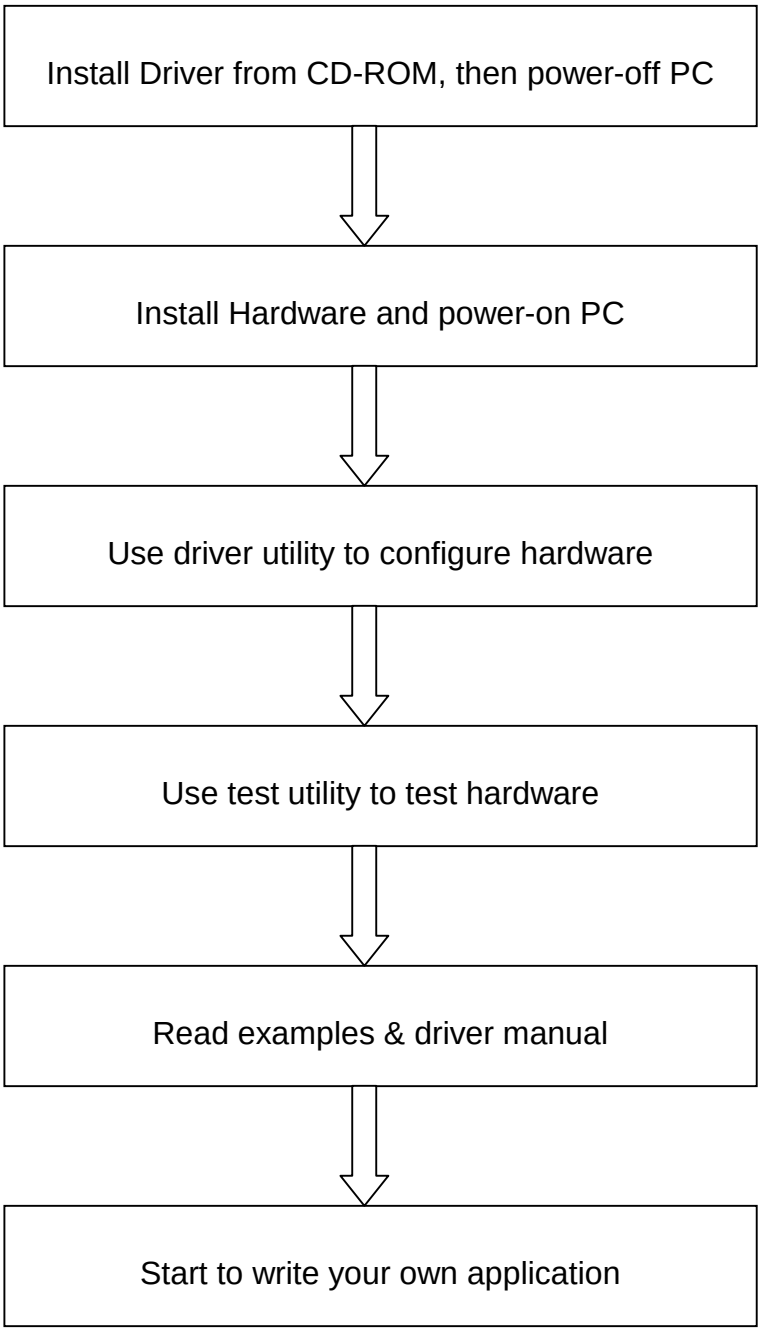

Fig. 1-1 Installation Flow Chart

1.4 Software Overview

Advantech offers a rich set of DLL drivers, third-party driver support and application software to help fully exploit the functions of your PCI-1730/1733/1734 card:

- Device Drivers (on the companion CD-ROM)
- LabVIEW driver
- Advantech ActiveDAQ
- Advantech GeniDAQ

Programming choices for DA&C cards: You may use Advantech application software such as Advantech Device Drivers. On the other hand, advanced users are allowed another option for register-level programming, although not recommended due to its laborious and time-consuming nature.

Device Drivers

The Advantech Device Drivers software is included on the companion CD-ROM at no extra charge. It also comes with all the Advantech DA&C cards. Advantech's DLL driver features a complete I/O function library to help boost your application performance. The Advantech Device Drivers for Windows 2000/95/98/ME/NT/XP works seamlessly with development tools such as Visual C++, Visual Basic, Inprise C++ Builder and Inprise Delphi.

Register-level Programming

Register-level programming is reserved for experienced programmers who find it necessary to write codes directly at the level of device registers. Since register-level programming requires much effort and time, we recommend that you use the Advantech Device Drivers instead. However, if register-level programming is indispensable, you should refer to the relevant information in *Appendix C, Register Structure and Format*, or to the example codes included on the companion CD-ROM.

1.5 Device Drivers Programming Roadmap

This section will provide you a roadmap to demonstrate how to build an application from scratch using Advantech Device Drivers with your favorite development tools such as Visual C++, Visual Basic, Delphi and C++ Builder. The step-by-step instructions on how to build your own applications using each development tool will be given in the *Device Drivers Manual*. Moreover, a rich set of example source codes are also given for your reference.

Programming Tools

Programmers can develop application programs with their favorite development tools:

- ❏ **Visual C++**
- ❏ **Visual Basic**
- ❏ **Delphi**
- ❏ **C++ Builder**

For instructions on how to begin programming works in each development tool, Advantech offers a *Tutorial* Chapter in the *Device Drivers Manual* for your reference. Please refer to the corresponding sections in this chapter on the *Device Drivers Manual* to begin your programming efforts. You can also take a look at the example source codes provided for each programming tool, since they can get you very well-oriented.

The *Device Drivers Manual* can be found on the companion CD-ROM. Or if you have already installed the Device Drivers on your system, The *Device Drivers Manual* can be readily accessed through the ***Start*** button:

Start/Programs/Advantech Device Driver V1.5/Driver Manual

The example source codes could be found under the corresponding installation folder such as the default installation path:

\Program Files\Advantech\ADSAPI\Examples

For information about using other function groups or other development tools, please refer to the *Creating Windows 95/NT/2000 Application with Device Driver* chapter and the *Function Overview* chapter on the *Device Drivers Manual*.

Programming with Device Drivers Function Library

Advantech Device Drivers offers a rich function library to be utilized in various application programs. This function library consists of numerous APIs that support many development tools, such as Visual C++, Visual Basic, Delphi and C++ Builder.

According to their specific functions or services, those APIs can be categorized into several function groups:

- ❏ **Digital Input/Output Function Group**
- ❏ **Port Function Group (direct I/O)**
- ❏ **Event Function Group**

For the usage and parameters of each function, please refer to the *Function Overview* chapter in the *Device Drivers Manual*.

Troubleshooting Device Driver Error

Driver functions will return a status code when they are called to perform a certain task for the application. When a function returns a code that is not zero, it means the function has failed to perform its designated function. To troubleshoot the Device Drivers error, you can pass the error code to **DRV_GetErrorMessage** function to return the error message. Or you can refer to the *Device Drivers Error Codes* Appendix in the *Device Drivers Manual* for a detailed listing of the Error Code, Error ID and the Error Message.

1.6 Accessories

Advantech offers a complete set of accessory products to support the PCI-1730/1733/1734 card. These accessories include:

Wiring Cable

- **PCL-10137** The PCL-10137 shielded cable is specially designed for PCI-1730/1733/1734 cards to provide high resistance to noise. To achieve a better signal quality, the signal wires are twisted in such a way as to form a "twisted-pair cable", reducing cross-talk and noise from other signal sources. Furthermore, its analog and digital lines are separately sheathed and shielded to neutralize EMI/EMC problems.

Wiring Boards

- **ADAM-3937** The ADAM-3937 is a 37-pin D-type wiring terminal module for DIN-rail mounting. This terminal module can be readily connected to the Advantech PC-Lab cards and allow easy yet reliable access to individual pin connections for the PCI-1730/1733/1734 card.
- **PCLD-880** The PCLD-880 is a universal screw-terminal board to be used with any of the PC-LabCards which have 37-pin D-type connectors.

All the **specifications**, **connectors**, **pin-assignments**, **registries format** are the same. Users can upgrade their system into PCI bus without change any existed wiring system.

2. Installation

This chapter gives users a package item checklist, proper instructions about unpacking and step-by-step procedures for both driver and card installation.

2.1 Unpacking

After receiving your PCI-1730/1733/1734 package, please inspect its contents first. The package should contain the following items:

☑ PCI-1730/1733/1734 card
☑ Companion CD-ROM (Device Drivers included)
☑ User's Manual

The PCI-1730/1733/1734 card harbors certain electronic components vulnerable to *electrostatic discharge* (ESD). ESD could easily damage the integrated circuits and certain components if preventive measures are not carefully paid attention to.

Before removing the card from the antistatic plastic bag, you should take following precautions to ward off possible ESD damage:

- Touch the metal part of your computer chassis with your hand to discharge static electricity accumulated on your body. Or one can also use a grounding strap.
- Touch the anti-static bag to a metal part of your computer chassis before opening the bag.
- Take hold of the card only by the metal bracket when removing it out of the bag.

After taking out the card, first you should:

- Inspect the card for any possible signs of external damage (loose or damaged components, etc.). If the card is visibly damaged, please notify our service department or our local sales representative immediately. Avoid installing a damaged card into your system.

Also pay extra caution to the following aspects to ensure proper installation:

- Avoid physical contact with materials that could hold static electricity such as plastic, vinyl and Styrofoam.
- Whenever you handle the card, grasp it only by its edges. DO NOT TOUCH the exposed metal pins of the connector or the electronic components.

Note:

✎ Keep the anti-static bag for future use. You might need the original bag to store the card if you have to remove the card from PC or transport it elsewhere.

2.2 Driver Installation

We recommend you to install the driver before you install the PCI-1730/1733/1734 card into your system, since this will guarantee a smooth installation process.

The Advantech Device Driver Setup program for the PCI-1730/1733/1734 card is included on the companion CD-ROM that is shipped with your DA&C card package. Please follow the steps below to install the driver software:

Step 1: Insert the companion CD-ROM into your CD-ROM drive.

Step 2: The Setup program will be launched automatically if you have the autoplay function enabled on your system. When the Setup Program is launched, you'll see the following Setup Screen.

Note:

✎ If the autoplay function is not enabled on your computer, use Windows Explorer or Windows ***Run*** command to execute SETUP.EXE on the companion CD-ROM.

Fig. 2-1 The Setup Screen of Advantech Automation Software

Step 3: Select the *Individual Drivers* option.

Step 4: Select the specific device then just follow the installation instructions step by step to complete your device driver installation and setup.

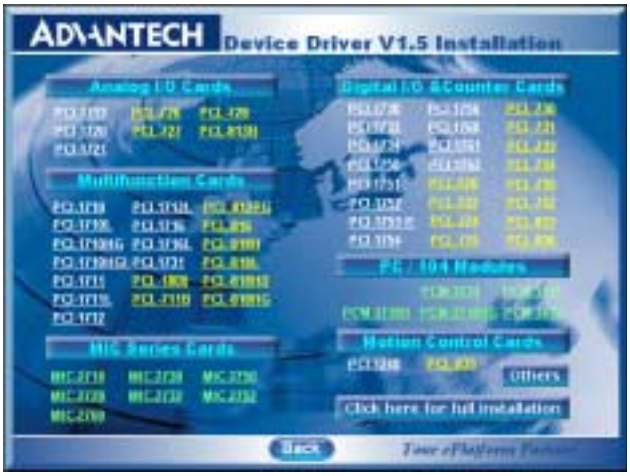

Fig. 2-2 Different options for Driver Installation

For further information on driver-related issues, an online version of *Device Drivers Manual* is available by accessing the following path:

Start/Programs/Advantech Device Drivers V1.5/ Device Drivers Manual

2.3 Hardware Installation

Note:

✎ Make sure you have installed the driver first before you install the card (please refer to *2.2 Driver Installation*)

After the device driver installation is completed, you can now go on to install the PCI-1730/1733/1734 card in any PCI slot on your computer. But it is suggested that you should refer to the computer user manual or related documentation if you have any doubt. Please follow the steps below to install the card on your system.

Step 1: Turn off your computer and unplug the power cord and cables. TURN OFF your computer before installing or removing any components on the computer.

Step 2: Remove the cover of your computer.

Step 3: Remove the slot cover on the back panel of your computer.

Step 4: Touch the metal part on the surface of your computer to neutralize the static electricity that might be on your body.

Step 5: Insert the PCI-1730/1733/1734 card into a PCI slot. Hold the card only by its edges and carefully align it with the slot. Insert the card firmly into place. Use of excessive force must be avoided, otherwise the card might be damaged.

Step 6: Fasten the bracket of the PCI card on the back panel rail of the computer with screws.

Step 7: Connect appropriate accessories (37-pin cable, wiring terminals, etc. if necessary) to the PCI card.

Step 8: Replace the cover of your computer chassis. Re-connect the cables you removed in step 2.

Step 9: Plug in the power cord and turn on the computer .

Note:

✎ In case you installed the card without installing the Device Drivers first, Windows 95/98/ME will recognize your card as an “unknown device” after rebooting, and will prompt you to provide the necessary driver. You should ignore the prompting messages (just click the ***Cancel*** button) and set up the driver according to the steps described in *2.4 Driver Installation*.

After the PCI-1730/1733/1734 card is installed, you can verify whether it is properly installed on your system in the *Device Manage*r:

1. Access the *Device Manager* through *Control Panel/System/Device Manage*r.
2. The *device name* of the PCI-1730/1733/1734 should be listed on the *Device Manager* tab on the System *Property* Page.

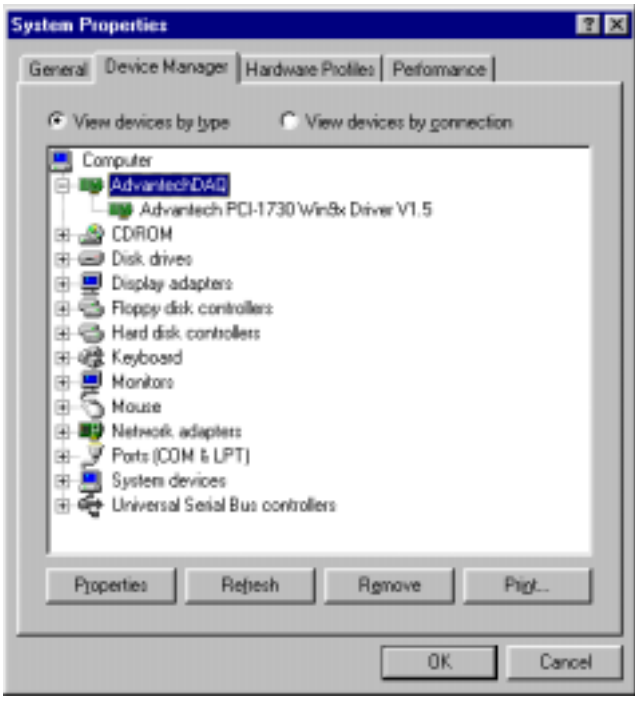

Fig. 2-3 The device name listed on the Device Manager

Note:

✎ If your card is properly installed, you should see the *device name* of your card listed on the *Device Manager* tab. **If you do see your device name listed on it but marked with an exclamation sign "!", it means your card has not been correctly installed.** In this case, remove the card device from the *Device Manager* by selecting its device name and press the ***Remove*** button. Then go through the driver installation process again.

After your card is properly installed on your system, you can now configure your device using the *Device Installation* Program that has itself already been installed on your system during driver setup. A complete device installation procedure should include *device setup*, *configuration* and *testin*g. The following sections will guide you through the Setup, Configuration and Testing of your device.

2.4 Device Setup & Configuration

The *Advantech Device Manager* program is a utility that allows you to set up, configure and test your device, and later stores your settings on the system registry. These settings will be used when you call the APIs of Advantech Device Drivers.

Setting Up the Device

Step 1: To install the I/O device for your card, you must first run the *Device Manager* program (by accessing ***Start/Programs/ Advantech Device Drivers V1.5).***

Step 2: You can then view the device(s) already installed on your system (if any) on the *Installed Devices* list box. Since you haven't installed any device yet, you might see a blank list such as the one below (Fig. 2-4).

Fig. 2-4 The Device Manager dialog box

Step 3: Scroll down the *Supported of Devices* box to find the device that you wish to install, then click the ***Add…*** button to evoke the *Existing unconfigured PCI-1730* dialog box such as one shown in Fig. 2-5. The *Existing unconfigured PCI-1730* dialog box lists all the installed devices on your system. Select the device you want to configure from the list box and press the ***OK*** button. After you have clicked ***OK***, you will see a *PCI-1730 Device Setting* dialog box such as the one in Fig. 2-6.

Fig. 2-5 The "Device(s) Found" dialog box

Configuring the Device

Step 4: On the *PCI-1730 Device Setting* dialog box (Fig. 2-6), you can configure the IDI00, IDI01 and DI00, DI01 Interrupt trigger mode either as *Rising Edge* or *Falling Edge*, and *Enable* or *Disable* the IDI00, IDI01 and DI00, DI01.

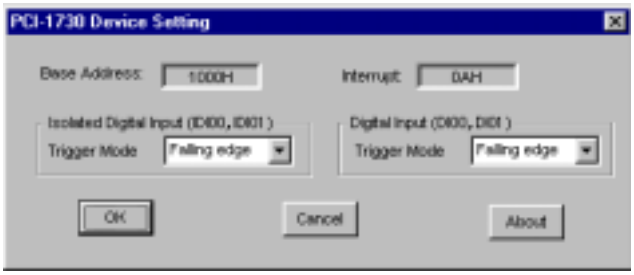

Fig. 2-6 The Device Setting dialog box

Step 5: After you have finished configuring the device, click ***OK*** and the *device name* will appear in the *Installed Devices* box as

seen below:

Fig. 2-7 The Device Name appearing on the list of devices box

---

Note:

✎ As we have noted, the *device name* **"000:<PCI-1730 BoardID=0 I/O=1000H>"** begins with a *device number* "000", which is specifically assigned to each card. The *device number* is passed to the driver to specify which device you wish to control.

After your card is properly installed and configured, you can click the ***Test…*** button to test your hardware by using the testing utility we supplied. For more detailed information, please refer to *Chapter 2* of the *Device Drivers Manual*.

You can also find the rich examples on the CD-ROM to speeding up your programming.

3. Signal Connections

3.1 Overview

Maintaining signal connections is one of the most important factors in ensuring that your application system is sending and receiving data correctly. A good signal connection can avoid unnecessary and costly damage to your PC and other hardware devices. This chapter provides useful information about how to connect input and output signals to the PCI-1730/1733/1734 via the I/O connector.

3.2 Switch and Jumper Settings

PCI-1730

The PCI-1730 card has two function jumper settings.

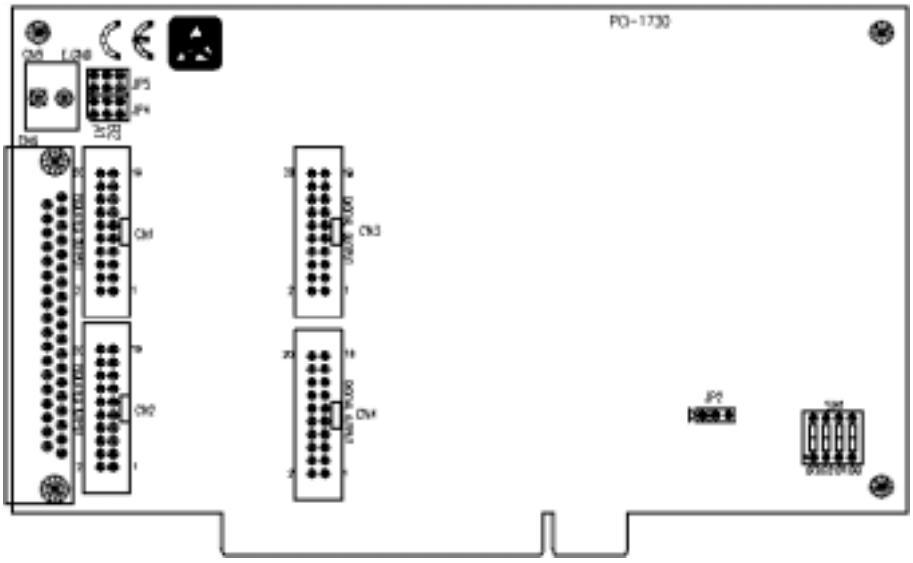

Fig. 3-1 Card connector, jumper and switch locations

Table 3-1: Summary of jumper settings

Names of Jumpers	Function description	
JP4, JP5		A1 version
		B2 version

Table 3-2: Summary of jumper settings

Names of Jumpers	Function description	
JP2		Keep last status after hot reset
		Default configuration

Setting the time to reset the digital outputs

Some users will want the capability of clearing each digital output when the system (or PC) issues a reset signal on the PCI bus. Some users will want to clear their digital outputs only as part of system power-on. The PCI-1730 satisfies both these needs by providing jumper JP2. Depending on the application, this capability may allow digital outputs to be "OFF" without requiring a complete shutdown of processes controlled by the card.

Complete loss of power to the chip clears the chip memory. Thus, no matter how JP2 is set, if the power to the PCI-1730 is disconnected, the digital output channel's initial power-on state will be "OFF".

Board ID setting

BD3	BD2	BD1	BD0	Board ID
1	1	1	1	0
1	1	1	0	1
1	1	0	1	2
1	1	0	0	3
1	0	1	1	4
1	0	1	0	5
1	0	0	1	6
1	0	0	0	7
0	1	1	1	8
0	1	1	0	9
0	1	0	1	10
0	1	0	0	11
0	0	1	1	12
0	0	1	0	13
0	0	0	1	14
0	0	0	0	15

Note: On: 1, Off: 0

PCI-1733

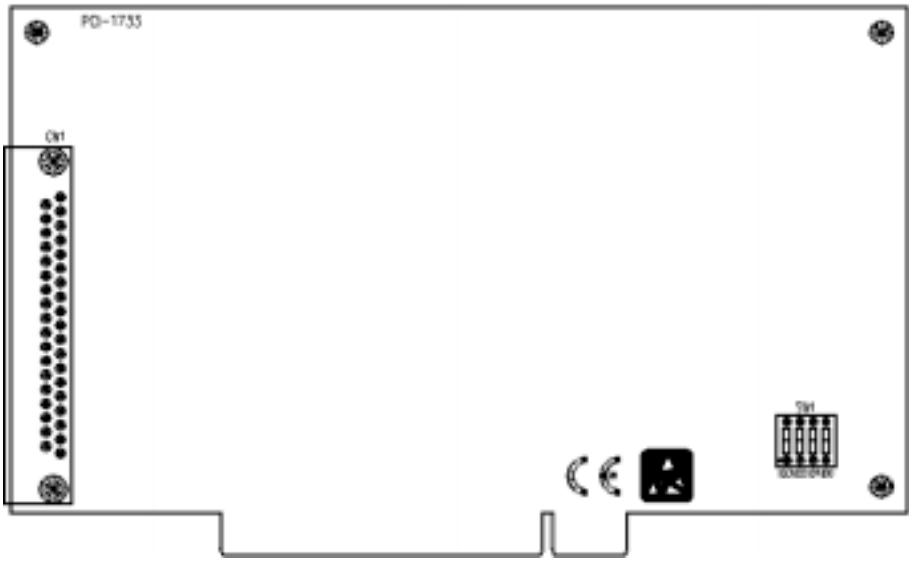

Fig. 3-2 Card connector, jumper and switch locations

Board ID setting

BD3	BD2	BD1	BD0	Board ID
1	1	1	1	0
1	1	1	0	1
1	1	0	1	2
1	1	0	0	3
1	0	1	1	4
1	0	1	0	5
1	0	0	1	6
1	0	0	0	7
0	1	1	1	8
0	1	1	0	9
0	1	0	1	10
0	1	0	0	11
0	0	1	1	12
0	0	1	0	13
0	0	0	1	14
0	0	0	0	15

Note: On: 1, Off: 0

PCI-1734

The PCI-1734 card has one function jumper setting.

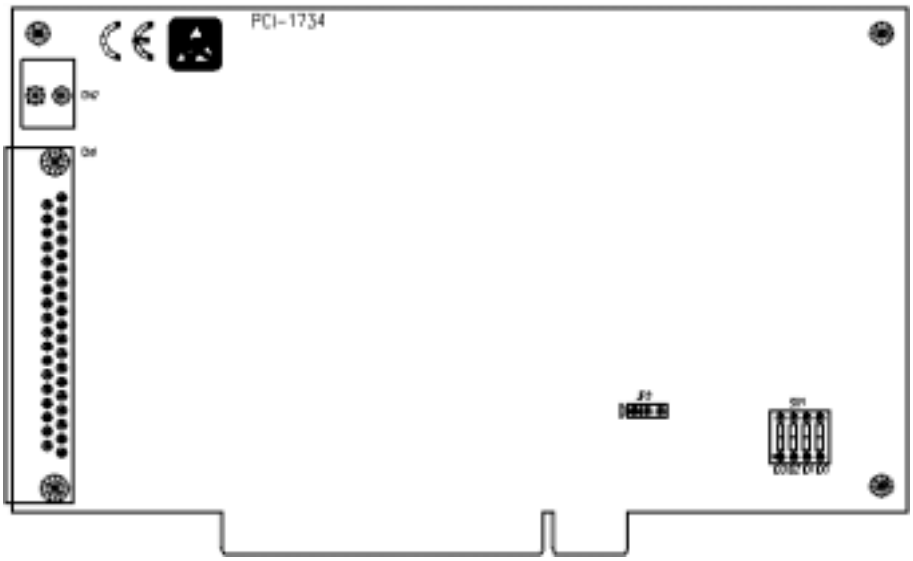

Fig. 3-3 Card connector, jumper and switch locations

Table 3-3: Summary of jumper settings

Names of Jumpers	Function description	
JP2		Keep last status after hot reset
		Default configuration

Setting the time to reset the digital outputs

Some users will want the capability of clearing each digital output when the system (or PC) issues a reset signal on the PCI bus. Some users will want to clear their digital outputs only as part of system power-on. The PCI-1734 satisfies both these needs by providing jumper JP2. Depending on the application, this capability may allow digital outputs to be "OFF" without requiring a complete shutdown of processes controlled by the card.

Complete loss of power to the chip clears the chip memory. Thus, no matter how JP2 is set, if the power to the PCI-1734 is disconnected, the digital output channel's initial power-on state will be "OFF".

Board ID setting

BD3	BD2	BD1	BD0	Board ID
1	1	1	1	0
1	1	1	0	1
1	1	0	1	2
1	1	0	0	3
1	0	1	1	4
1	0	1	0	5
1	0	0	1	6
1	0	0	0	7
0	1	1	1	8
0	1	1	0	9
0	1	0	1	10
0	1	0	0	11
0	0	1	1	12
0	0	1	0	13
0	0	0	1	14
0	0	0	0	15

Note: On: 1, Off: 0

3.3 Signal Connections

PCI-1730 (JP4, JP5: REV.A1)

Pin Assignments

CN1

IDO 0	1	2	IDO 1
IDO 2	3	4	IDO 3
IDO 4	5	6	IDO 5
IDO 6	7	8	IDO 7
IDO 8	9	10	IDO 9
IDO 10	11	12	IDO 11
IDO 12	13	14	IDO 13
IDO 14	15	16	IDO 15
EGND	17	18	EGND
EGND	19	20	PCOM

CN2

IDI 0	1	2	IDI 1
IDI 2	3	4	IDI 3
IDI 4	5	6	IDI 5
IDI 6	7	8	IDI 7
IDI 8	9	10	IDI 9
IDI 10	11	12	IDI 11
IDI 12	13	14	IDI 13
IDI 14	15	16	IDI 15
ECOM	17	18	ECOM
ECOM	19	20	ECOM

CN3

DO 0	1	2	DO 1
DO 2	3	4	DO 3
DO 4	5	6	DO 5
DO 6	7	8	DO 7
DO 8	9	10	DO 9
DO 10	11	12	DO 11
DO 12	13	14	DO 13
DO 14	15	16	DO 15
GND	17	18	GND
+5 V	19	20	+12 V

CN4

DI 0	1	2	DI 1
DI 2	3	4	DI 3
DI 4	5	6	DI 5
DI 6	7	8	DI 7
DI 8	9	10	DI 9
DI 10	11	12	DI 11
DI 12	13	14	DI 13
DI 14	15	16	DI 15
GND	17	18	GND
+5 V	19	20	+12 V

CN5

EGND	1	2	EGND

Description of pin use:

IDIn (n=0 ~ 15):
Isolated digital input
IDOn (n=0 ~ 15):
Isolated digital output
ECOM:
External common Vcc/GND of IDI
PCOM:
Free wheeling common diode for IDO
EGND:
External ground for IDO

DIn (n=0 ~ 15):
Digital input
DOn (n=0 ~ 15):
Digital output
GND:
Digital ground

CN6

IDI 0	1	20	IDI 1
IDI 2	2	21	IDI 3
IDI 4	3	22	IDI 5
IDI 6	4	23	IDI 7
IDI 8	5	24	IDI 9
IDI 10	6	25	IDI 11
IDI 12	7	26	IDI 13
IDI 14	8	27	IDI 15
ECOM	9	28	EGND
EGND	10	29	EGND
IDO 0	11	30	IDO 1
IDO 2	12	31	IDO 3
IDO 4	13	32	IDO 5
IDO 6	14	33	IDO 7
IDO 8	15	34	IDO 9
IDO 10	16	35	IDO 11
IDO 12	17	36	IDO 13
IDO 14	18	37	IDO 15
PCOM	19		

Note: **ECOM** and **PCOM** are totally different. User must be connect them carefully!

Fig. 3-4 I/O connector pin assignments for the PCI-1730 (Rev.A1)

PCI-1730 (JP4, JP5: REV.B2)
Pin Assignments

CN1

IDO 0	1	2	IDO 1
IDO 2	3	4	IDO 3
IDO 4	5	6	IDO 5
IDO 6	7	8	IDO 7
IDO 8	9	10	IDO 9
IDO 10	11	12	IDO 11
IDO 12	13	14	IDO 13
IDO 14	15	16	IDO 15
EGND	17	18	EGND
PCOM0	19	20	PCOM1

CN2

IDI 0	1	2	IDI 1
IDI 2	3	4	IDI 3
IDI 4	5	6	IDI 5
IDI 6	7	8	IDI 7
IDI 8	9	10	IDI 9
IDI 10	11	12	IDI 11
IDI 12	13	14	IDI 13
IDI 14	15	16	IDI 15
ECOM0	17	18	ECOM1
ECOM0	19	20	ECOM1

CN3

DO 0	1	2	DO 1
DO 2	3	4	DO 3
DO 4	5	6	DO 5
DO 6	7	8	DO 7
DO 8	9	10	DO 9
DO 10	11	12	DO 11
DO 12	13	14	DO 13
DO 14	15	16	DO 15
GND	17	18	GND
+5 V	19	20	+12 V

CN4

DI 0	1	2	DI 1
DI 2	3	4	DI 3
DI 4	5	6	DI 5
DI 6	7	8	DI 7
DI 8	9	10	DI 9
DI 10	11	12	DI 11
DI 12	13	14	DI 13
DI 14	15	16	DI 15
GND	17	18	GND
+5 V	19	20	+12 V

CN5

EGND	1	2	EGND

Description of pin use:

IDI*n* (*n*=0 ~ 15):
Isolated digital input
IDO*n* (*n*=0 ~ 15):
Isolated digital output
ECOM*n* (*n*=0 ~ 1):
External common Vcc/GND of IDI
PCOM*n* (*n*=0 ~ 1):
Free wheeling common diode for IDO
EGND:
External ground for IDO

DI*n* (*n*=0 ~ 15):
Digital input
DO*n* (*n*=0 ~ 15):
Digital output
GND:
Digital ground

CN6

IDI 0	1	20	IDI 1
IDI 2	2	21	IDI 3
IDI 4	3	22	IDI 5
IDI 6	4	23	IDI 7
IDI 8	5	24	IDI 9
IDI 10	6	25	IDI 11
IDI 12	7	26	IDI 13
IDI 14	8	27	IDI 15
ECOM0	9	28	ECOM1
PCOM0	10	29	EGND
IDO 0	11	30	IDO 1
IDO 2	12	31	IDO 3
IDO 4	13	32	IDO 5
IDO 6	14	33	IDO 7
IDO 8	15	34	IDO 9
IDO 10	16	35	IDO 11
IDO 12	17	36	IDO 13
IDO 14	18	37	IDO 15
PCOM1	19		

Note: **ECOM*n*** and **PCOM*n*** are totally different. User must be connect them carefully!

Fig. 3-5 I/O connector pin assignments for the PCI-1730 (Rev. B2)

TTL-level Digital Input/Output

The PCI-1730 has 16 TTL-level digital inputs and 16 TTL-level digital outputs. The following figure shows connections to exchange digital signals with other TTL devices:

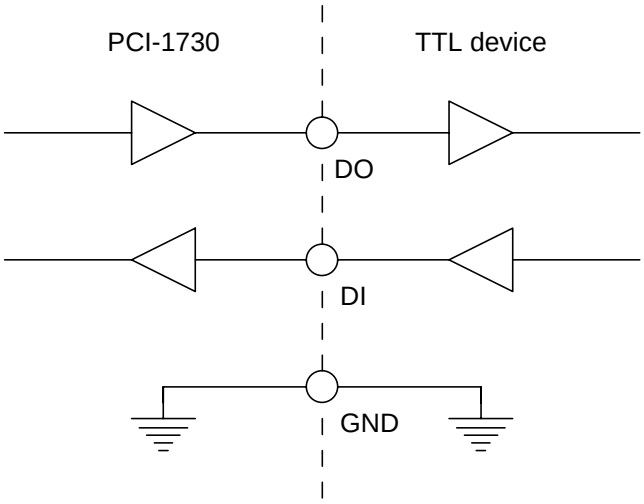

Figure 3-6: TTL-level digital input/output connection

If you want to receive an OPEN/SHORT signal from a switch or relay, add a pull-up resistor to ensure that the input is held at a high level when the contacts are open. See the figure below:

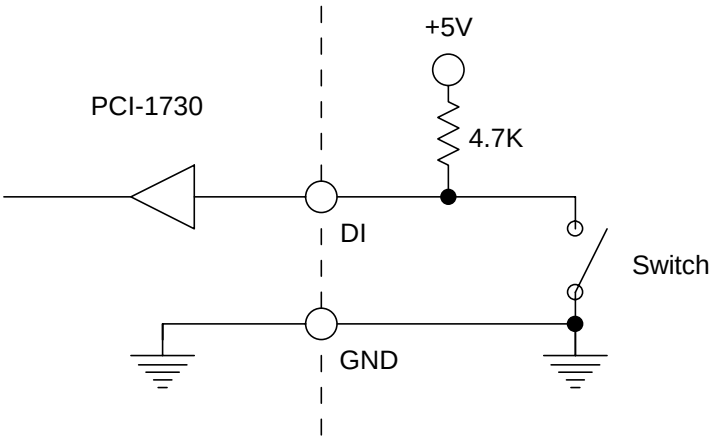

Figure 3-7: Open/short connection

Isolated Digital Input

Each of the 16 isolated digital input channels accept voltages from 5 to 30 V. Every eight input channels share one external ground. (Channels 0~7 use ECOM0. Channels 8~15 use ECOM1.) The following figure shows how to connect an external input source to the card's isolated inputs.

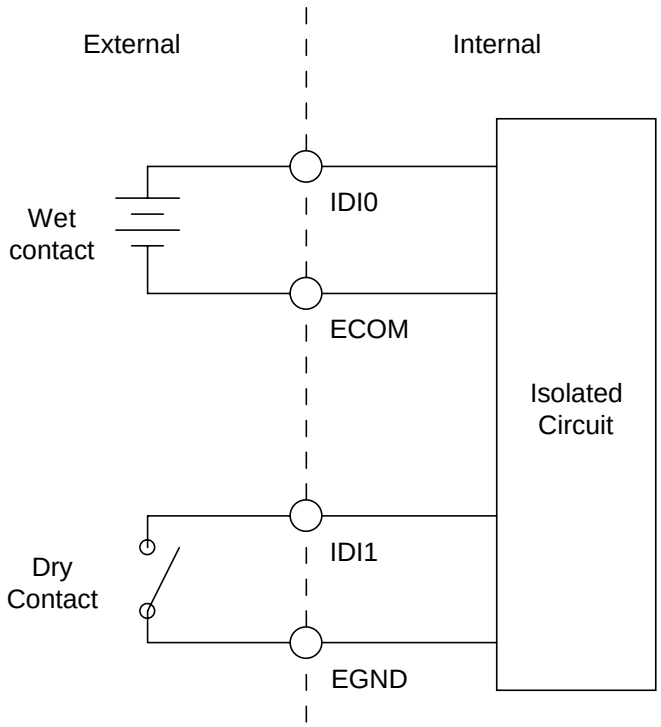

Figure 3-8: Isolated digital input connection

Isolated Digital Output

Each of the 16 isolated digital output channels comes equipped with a darlington transistor. Every eight ouput channels share common emitters and integral suppression diodes for inductive load, actived by connecting PCOM to VDD. (Channels 0~7 use PCOM0. Channels 8~15 use PCOM1.)

If the external voltage (5~40 V) is connected to each isolated output channel (IDO) and its isolated digital output turns on (200 mA per channel maximum), the card's current will sink from the external voltage. The current through each EGND should not exceed 50 mA. If the current for all channels combined exceeds 150 mA, return the current to the external voltage through CN6. The following figure shows how to connect an external output load to the card's isolated outputs.

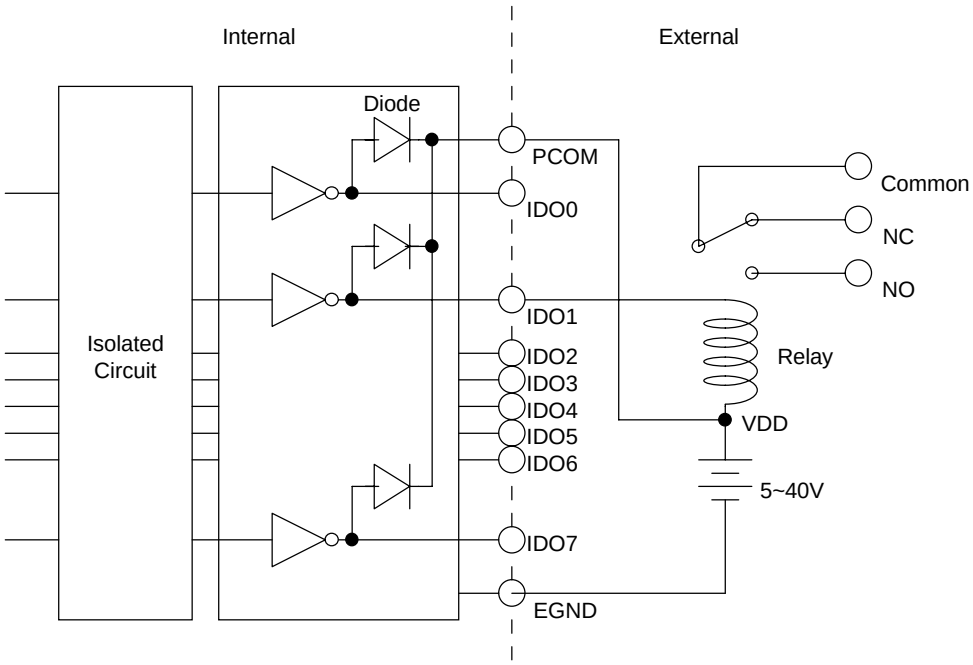

Figure 3-9: Isolated digital output connection

PCI-1733

Pin Assignments

Description of pin use:

IDI*n* (*n*=0 ~ 31):
Isolated digital input
ECOM *n* (*n*=0 ~ 3):
External common Vcc/GND of IDI
EGND:
External ground for IDI

CN1

IDI 0	1	20	IDI 1
IDI 2	2	21	IDI 3
IDI 4	3	22	IDI 5
IDI 6	4	23	IDI 7
ECOM0	5	24	IDI 8
IDI 9	6	25	IDI 10
IDI 11	7	26	IDI 12
IDI 13	8	27	IDI 14
IDI 15	9	28	ECOM1
IDI 16	10	29	IDI17
IDI 18	11	30	IDI19
IDI 20	12	31	IDI21
IDI 22	13	32	IDI23
ECOM2	14	33	IDI24
IDI25	15	34	IDI26
IDI27	16	35	IDI28
IDI29	17	36	IDI30
IDI31	18	37	ECOM3
EGND	19		

Fig. 3-10 I/O connector pin assignments for the PCI-1733

Isolated Digital Input

Each of the 32 isolated digital input channels accept voltages from 5 to 30 V. Every eight input channels share one external ground. (Channels 0~7 use ECOM0. Channels 8~15 use ECOM1. Channels 16~23 use ECOM2. Channels 24~31 use ECOM3.) The following figure shows how to connect an external input source to the card's isolated inputs.

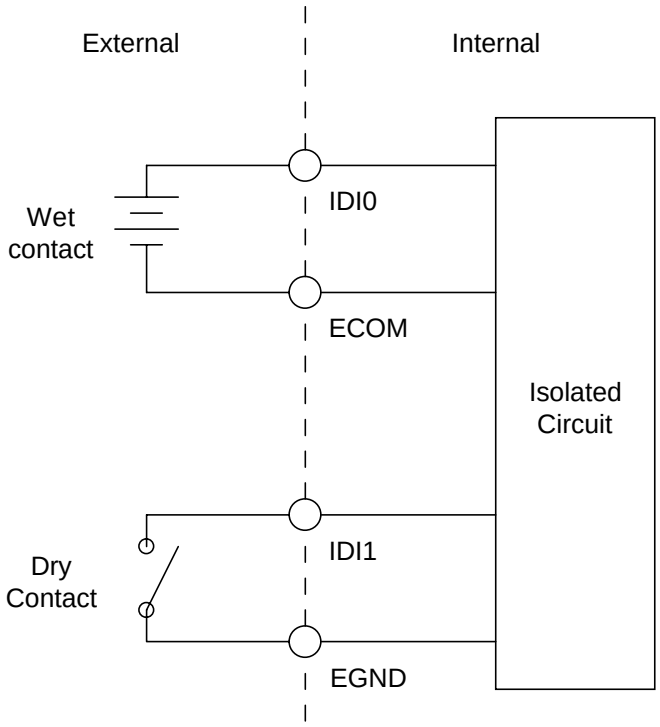

Figure 3-11: Isolated digital input connection

PCI-1734

Pin Assignments

Description of pin use:

IDO*n* (*n*=0 ~ 31):
Isolated digital output
PCOM *n* (*n*=0 ~ 3):
Free wheeling common diode for IDO
EGND:
External ground for IDO

CN1

IDO 0	1	20	IDO 1
IDO 2	2	21	IDO 3
IDO 4	3	22	IDO 5
IDO 6	4	23	IDO 7
PCOM0	5	24	IDO 8
IDO 9	6	25	IDO 10
IDO 11	7	26	IDO 12
IDO 13	8	27	IDO 14
IDO 15	9	28	PCOM1
IDO 16	10	29	IDO17
IDO 18	11	30	IDO19
IDO 20	12	31	IDO21
IDO 22	13	32	IDO23
PCOM2	14	33	IDO24
IDO25	15	34	IDO26
IDO27	16	35	IDO28
IDO29	17	36	IDO30
IDO31	18	37	PCOM3
EGND	19		

Fig. 3-12 I/O connector pin assignments for the PCI-1734

Isolated Digital Output

Each of the 32 isolated digital output channels comes equipped with a darlington transistor. Every eight ouput channels share common emitters and integral suppression diodes for inductive load, actived by connecting PCOM to VDD. (Channels 0~7 use PCOM0. Channels 8~15 use PCOM1. Channels 16~23 use PCOM2. Channels 24~31 use PCOM3.)

If the external voltage (5~40 V) is connected to each isolated output channel (IDO) and its isolated digital output turns on (200 mA per channel maximum), the card's current will sink from the external voltage. The current through each EGND should not exceed 50 mA. If the current for all channels combined exceeds 150 mA, return the current to the external voltage through CN1. The following figure shows how to connect an external output load to the card's isolated outputs.

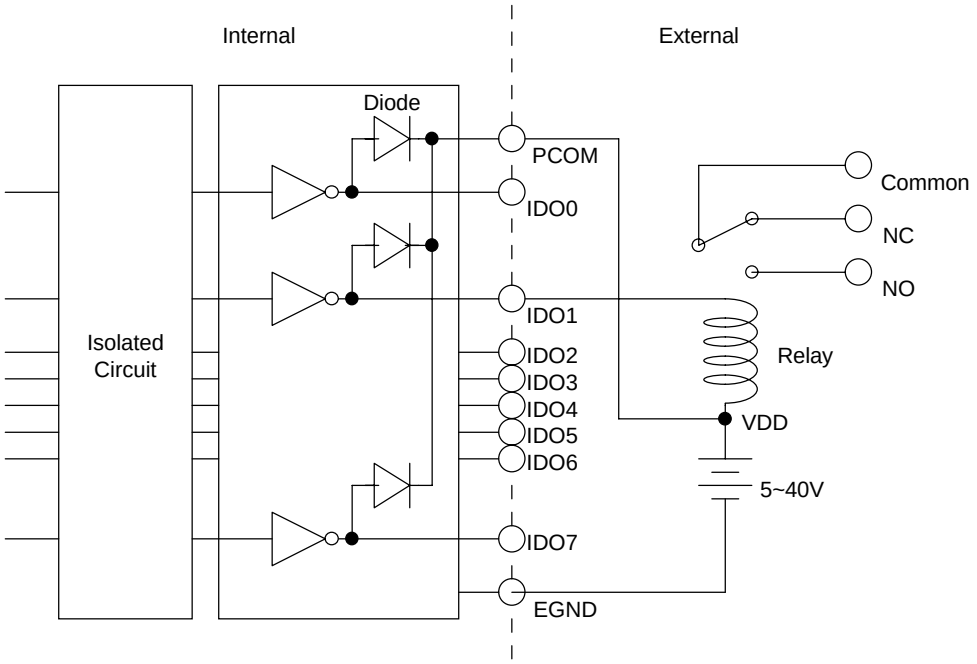

Figure 3-13: Isolated digital output connection

Appendix A. Specifications

PCI-1730

Isolated Digital Input

Number of Channel	16 (bi-directional)	
Optical Isolation	2,500 V_{DC}	
Opto-isolator response time	25μs	
Over-voltage Protect	70 V_{DC}	
Input Voltage	VIH (max.)	30 V_{DC}
	VIH (min.)	5 V_{DC}
	VIL (max.)	2 V_{DC}
Input Current	5 V_{DC}	1.4 mA (typical)
	12 V_{DC}	3.9 mA (typical)
	24 V_{DC}	8.2 mA (typical)
	30 V_{DC}	10.3 mA (typical)

Isolated Digital Output

Number of Channel	16
Optical Isolation	2,500 V_{DC}
Output Voltage	Open collector 5 to 40 V_{DC}
Sink/Source Current	200 mA max./channel

Non-isolated Digital Input/Output

Input Channels	16	
Input Voltage	Low	0.8 V max.
	High	2.0 V min.
Output Channels	16	
Output Voltage	Low	0.5 V max. @ +24 mA (sink)
	High	2.4 V min. @ -15 mA (source)

General:

I/O Connector Type	37-pin D-Sub female	
Dimensions	175 mm x 100 mm (6.9" x 3.9")	
Power Consumption	Typical	+5 V @ 250 mA +12 V @ 35 mA
	Max.	+5 V @ 400 mA +12 V @ 60 mA
Temperature	Operation	0~+60°C (32~140°F) (refer to *IEC 68-2-1,2)*
	Storage	-20~+85°C (-4~185°F)
Relative Humidity	5~95%RH non-condensing (refer to *IEC 68-2-3*)	
Certification	CE certified	

PCI-1733

Isolated Digital Input

Number of Channel	32 (bi-directional)	
Optical Isolation	2,500 V_{DC}	
Opto-isolator response time	25μs	
Over-voltage Protect	70 V_{DC}	
Input Voltage	VIH (max.)	30 V_{DC}
	VIH (min.)	5 V_{DC}
	VIL (max.)	2 V_{DC}
Input Current	5 V_{DC}	1.4 mA (typical)
	12 V_{DC}	3.9 mA (typical)
	24 V_{DC}	8.2 mA (typical)
	30 V_{DC}	10.3 mA (typical)

General

I/O Connector Type	37-pin D-Sub female	
Dimensions	175 mm x 100 mm (6.9" x 3.9")	
Power Consumption	Typical	+5 V @ 200 mA +12 V @ 50 mA
	Max.	+5 V @ 350 mA +12 V @ 75 mA
Temperature	Operation	0~+60°C (32~140°F) (refer to *IEC 68-2-1,2)*
	Storage	-20~+85°C (-4~185°F)
Relative Humidity	5~95%RH non-condensing (refer to *IEC 68-2-3*)	
Certification	CE certified	

PCI-1734

Isolated Digital Output

Number of Channel	32
Optical Isolation	2,500 V_{DC}
Output Voltage	Open collector 5 to 40 V_{DC}
Sink/Source Current	200 mA max./channel

General

I/O Connector Type	37-pin D-Sub female	
Dimensions	175 mm x 100 mm (6.9" x 3.9")	
Power Consumption	Typical	+5 V @ 150 mA +12 V @ 15 mA
	Max.	+5 V @ 250 mA +12 V @ 25 mA
Temperature	Operation	0~+60°C (32~140°F) (refer to *IEC 68-2-1,2)*
	Storage	-20~+85°C (-4~185°F)
Relative Humidity	5~95%RH non-condensing (refer to *IEC 68-2-3*)	
Certification	CE certified	

Appendix B. Block Diagram

PCI-1730

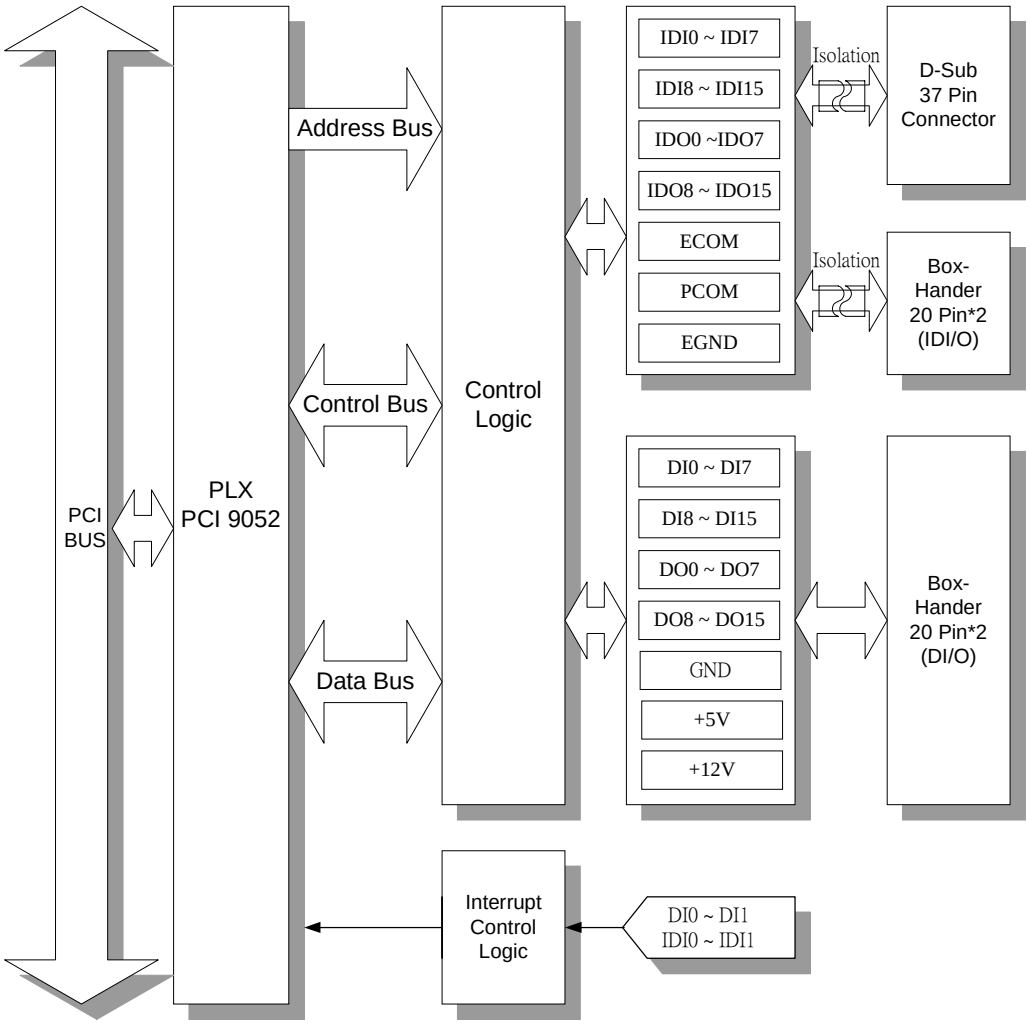

PCI-1733

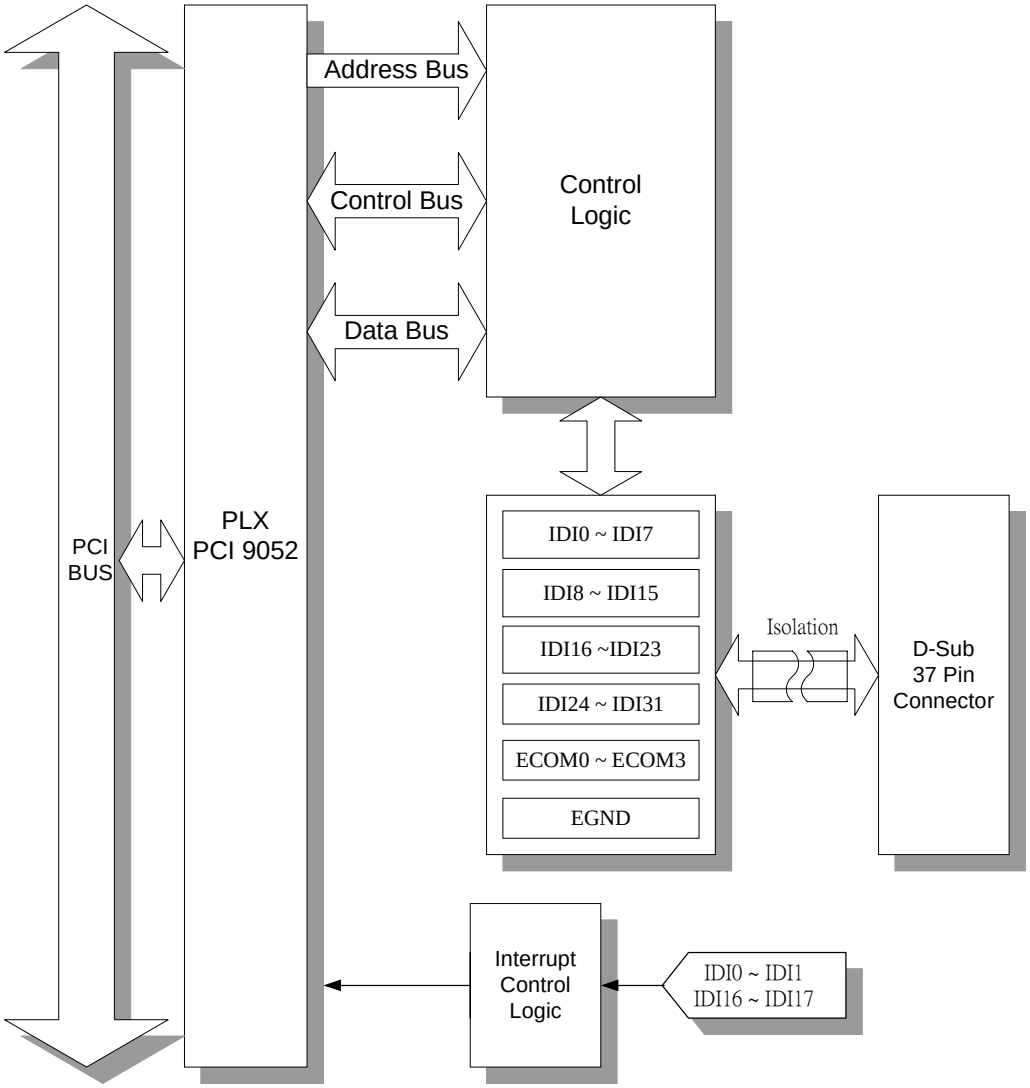
Address Bus
Control Bus
Data Bus
Control Logic
PCI BUS
PLX PCI 9052
IDI0 ~ IDI7
IDI8 ~ IDI15
IDI16 ~IDI23
IDI24 ~ IDI31
ECOM0 ~ ECOM3
EGND
Isolation
D-Sub 37 Pin Connector
Interrupt Control Logic
IDI0 ~ IDI1
IDI16 ~ IDI17

PCI-1734

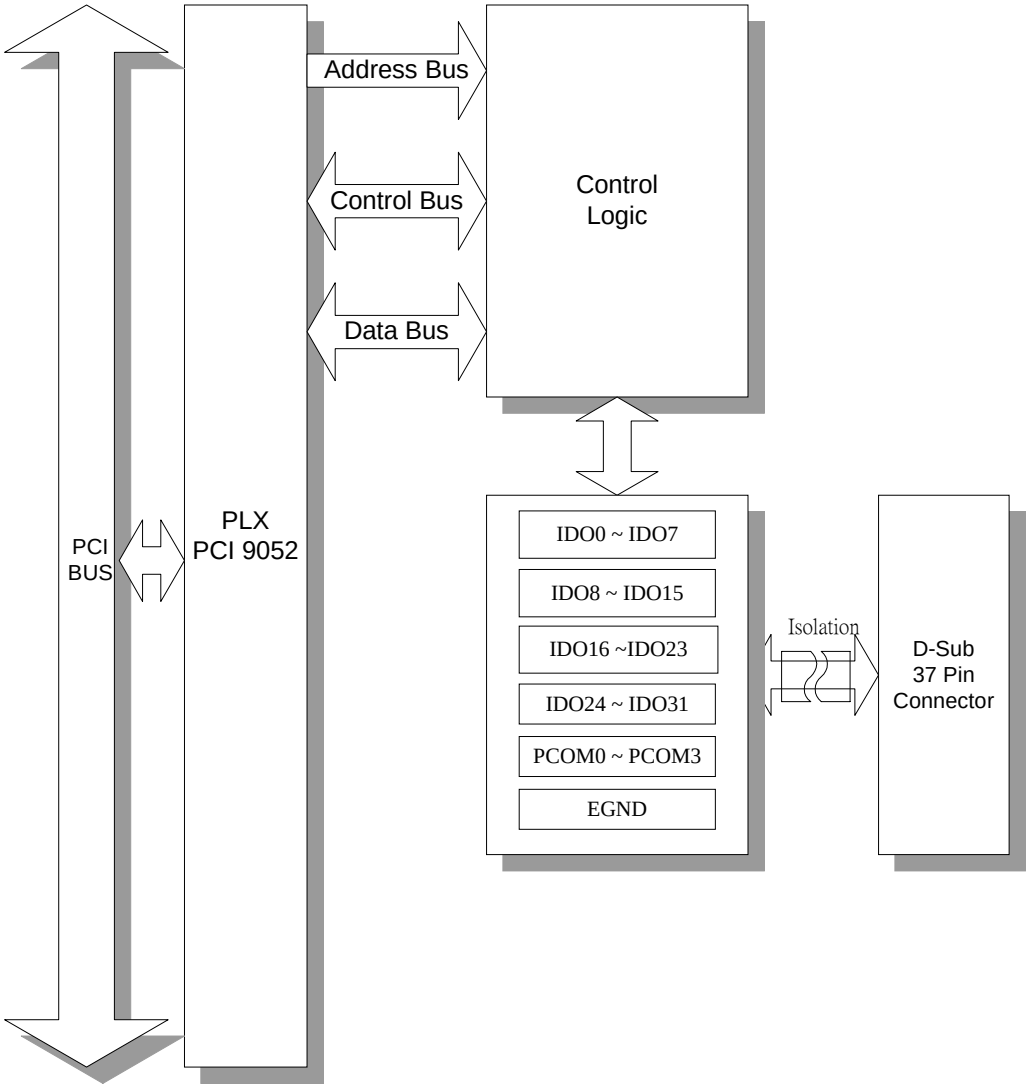
Address Bus
Control Bus
Data Bus
Control
Logic
PCI
BUS
PLX
PCI 9052
IDO0 ~ IDO7
IDO8 ~ IDO15
IDO16 ~IDO23
IDO24 ~ IDO31
PCOM0 ~ PCOM3
EGND
Isolation
D-Sub
37 Pin
Connector

Appendix C. Register Structure and Format

C.1 Overview

The PCI-1730/1733/1734 is delivered with an easy-to-use Advantech Device Drivers for user programming under the Windows 2000/95/98/ME/NT/XP operating system. We advise users to program the PCI-1730/1733/1734 by using the Advantech Device Drivers provided by Advantech to avoid the complexity of low-level programming by register.

The most important consideration in programming the PCI-1730/1733/1734 the register level is to understand the function of the card's registers. The information in the following sections is provided only for users who would like to do their own low-level programming.

C.2 I/O Port Address Map

The PCI-1730/1733/1734 requires 16 consecutive addresses in the PC's I/O space. The address of each register is specified as an offset from the card's base address. For example, BASE+0 is the card's base address and BASE+6 is the base address plus six bytes.

The table C-1 shows the function of each register of the PCI-1730/1733/1734 or driver and its address relative to the card's base address.

Table C-1 PCI-1730 register format

Base Addr. +HEX		7	6	5	4	3	2	1	0
0H	R	**Isolated Digital Input**							
		IDI7	IDI6	IDI5	IDI4	IDI3	IDI2	IDI1	IDI0
	W	**Isolated Digital Output**							
		IDO7	IDO6	IDO5	IDO4	IDO3	IDO2	IDO1	IDO0
01H	R	**Isolated Digital Input**							
		IDI15	IDI14	IDI13	IDI12	IDI11	IDI10	IDI9	IDI8
	W	**Isolated Digital Output**							
		IDO15	IDO14	IDO13	IDO12	IDO11	IDO10	IDO9	IDO8
02H	R	**Digital Input**							
		DI7	DI6	DI5	DI4	DI3	DI2	DI1	DI0
	W	**Digital Output**							
		DO7	DO6	DO5	DO4	DO3	DO2	DO1	DO0
03H	R	**Digital Input**							
		DI15	DI14	DI13	DI12	DI11	DI10	DI9	DI8
	W	**Digital Output**							
		DO15	DO14	DO13	DO12	DO11	DO10	DO9	DO8
04H	R	**Board ID Register**							
						BD3	BD2	BD1	BD0
08H	R	**Interrupt Enable Status**							
						DI1EN	DI0EN	IDI1EN	IDI0EN
	W	**Interrupt Enable Register**							
						DI1EN	DI0EN	IDI1EN	IDI0EN
0CH	R	**Interrupt Triggering Status**							
						DI1RF	DI0RF	IDI1RF	IDI0RF
	W	**Interrupt Triggering Register**							
						DI1RF	DI0RF	IDI1RF	IDI0RF
10H	R	**Interrupt Flag**							
						DI1F	DI0F	IDI1F	IDI0F
	W	**Interrupt Clear Register**							
						DI1CLR	DI0CLR	IDI1CLR	IDI0CLR

Table C-2 PCI-1733 register format

Base Addr. +HEX		7	6	5	4	3	2	1	0
00H	R	**Isolated Digital Input**							
		IDI7	IDI6	IDI5	IDI4	IDI3	IDI2	IDI1	IDI0
	W	**N/A**							
01H	R	**Isolated Digital Input**							
		IDI15	IDI14	IDI13	IDI12	IDI11	IDI10	IDI9	IDI8
	W	**N/A**							
02H	R	**Isolated Digital Input**							
		IDI23	IDI22	IDI21	IDI20	IDI19	IDI18	IDI17	IDI16
	W	**N/A**							
03H	R	**Isolated Digital Input**							
		IDI31	IDI30	IDI29	IDI28	IDI27	IDI26	IDI25	IDI24
	W	**N/A**							
04H	R	**Board ID Register**							
						BD3	BD2	BD1	BD0
08H	R	**Interrupt Enable Status**							
						IDI17EN	IDI16EN	IDI1EN	IDI0EN
	W	**Interrupt Enable Register**							
						IDI17EN	IDI16EN	IDI1EN	IDI0EN
0CH	R	**Interrupt Triggering Status**							
						IDI17RF	IDI16RF	IDI1RF	IDI0RF
	W	**Interrupt Triggering Register**							
						IDI17RF	IDI16RF	IDI1RF	IDI0RF
10H	R	**Interrupt Flag**							
						IDI17F	IDI16F	IDI1F	IDI0F
	W	**Interrupt Clear Register**							
						IDI17CLR	IDI16CLR	IDI1CLR	IDI0CLR

Table C-3 PCI-1734 register format

Base Addr. +HEX		7	6	5	4	3	2	1	0
0H	R	N/A							
	W	Isolated Digital Output							
		IDO7	IDO6	IDO5	IDO4	IDO3	IDO2	IDO1	IDO0
1H	R	N/A							
	W	Isolated Digital Output							
		IDO15	IDO14	IDO13	IDO12	IDO11	IDO10	IDO9	IDO8
2H	R	N/A							
	W	Isolated Digital Output							
		IDO23	IDO22	IDO21	IDO20	IDO19	IDO18	IDO17	IDO16
3H	R	N/A							
	W	Isolated Digital Output							
		IDO31	IDO30	IDO29	IDO28	IDO27	IDO26	IDO25	IDO24
4H	R	Board ID Register							
						BD3	BD2	BD1	BD0
	W	N/A							

C.3 Isolated Digital Input Registers -- BASE+0H/1H (/2H/3H)

The PCI-1730 offers 16-ch isolated digital input channels. These channels use the input ports at addresses BASE+0H/1H.

Table C-1 Register for isolated digital input

Read	**Isolated Digital Input**							
Bit #	7	6	5	4	3	2	1	0
BASE + 0H	IDI7	IDI6	IDI5	IDI4	IDI3	IDI2	IDI1	IDI0
BASE + 1H	IDI15	IDI14	IDI13	IDI12	IDI11	IDI10	IDI9	IDI8

The PCI-1733 offers 32-ch isolated digital input channels. These channels use the input ports at addresses BASE+0H/1H/2H/3H.

Table C-2 Register for isolated digital input

Read	**Isolated Digital Input**							
Bit #	7	6	5	4	3	2	1	0
BASE + 0H	IDI7	IDI6	IDI5	IDI4	IDI3	IDI2	IDI1	IDI0
BASE + 1H	IDI15	IDI14	IDI13	IDI12	IDI11	IDI10	IDI9	IDI8
BASE + 2H	IDI23	IDI22	IDI21	IDI20	IDI19	IDI18	IDI17	IDI16
BASE + 3H	IDI31	IDI30	IDI29	IDI28	IDI27	IDI26	IDI25	IDI24

C.4 Isolated Digital Output Register- BASE+0H/1H (/2H/3H)

The PCI-1730 offers 16-ch isolated digital output channels. These channels use the registries at addresses BASE+0H/1H.

Table C-3 Register for isolated digital output

Write	**Isolated Digital Output**							
Bit #	7	6	5	4	3	2	1	0
BASE + 0H	IDO7	IDO6	IDO5	IDO4	IDO3	IDO2	IDO1	IDO0
BASE + 1H	IDO15	IDO14	IDO13	IDO12	IDO11	IDO10	IDO9	IDO8

The PCI-1734 offers 32-ch isolated digital output channels. These channels use the registries at addresses BASE+0H/1H/2H/3H.

Table C-4 Register for isolated digital output

Write	**Isolated Digital Output**							
Bit #	7	6	5	4	3	2	1	0
BASE + 0H	IDO7	IDO6	IDO5	IDO4	IDO3	IDO2	IDO1	IDO0
BASE + 1H	IDO15	IDO14	IDO13	IDO12	IDO11	IDO10	IDO9	IDO8
BASE + 2H	IDO23	IDO22	IDO21	IDO20	IDO19	IDO18	IDO17	IDO16
BASE + 3H	IDO31	IDO30	IDO29	IDO28	IDO27	IDO26	IDO25	IDO24

C.5 Non-isolated Digital Input Registers -- BASE+2H/3H

The PCI-1730 offers 16-ch digital input channels. These channels use the input ports at addresses BASE+2H/3H.

Table C-5 Register for digital input

Read	**Digital Input**							
Bit #	7	6	5	4	3	2	1	0
BASE + 2H	DI7	DI6	DI5	DI4	DI3	DI2	DI1	DI0
BASE + 3H	DI15	DI14	DI13	DI12	DI11	DI10	DI9	DI8

C.6 Non-isolated Digital Output Register- BASE+2H/3H

The PCI-1730 offers 16-ch digital output channels. These channels use the input ports at addresses BASE+2H/3H.

Table C-6 Register for digital output

Write	**Digital Output**							
Bit #	7	6	5	4	3	2	1	0
BASE + 2H	DO7	DO6	DO5	DO4	DO3	DO2	DO1	DO0
BASE + 3H	DO15	DO14	DO13	DO12	DO11	DO10	DO9	DO8

C.7 Board ID — BASE+4H

The PCI-1730/1733/1734 offers Board ID register BASE+4H. With correct Board ID settings, user can easily identify and access each card during hardware configuration and software programming.

Table C-7 Register for Board ID

Read	Board ID							
Bit #	7	6	5	4	3	2	1	0
BASE + 4H					BD3	BD2	BD1	BD0

BD3 ~ DB0 **Board ID**

BD0 LSB of the Board ID

BD3 MSB of the Board ID

BD3	BD2	BD1	BD0	Board ID
1	1	1	1	0
1	1	1	0	1
1	1	0	1	2
1	1	0	0	3
1	0	1	1	4
1	0	1	0	5
1	0	0	1	6
1	0	0	0	7
0	1	1	1	8
0	1	1	0	9
0	1	0	1	10
0	1	0	0	11
0	0	1	1	12
0	0	1	0	13
0	0	0	1	14
0	0	0	0	15

Note: On: 1, Off: 0

C.8 Interrupt Status Register — BASE+8H/CH/10H

The PCI-1730 ***Interrupt Status Register*** control the status of four interrupt signal sources (IDI0, IDI1, DI0, DI1).

Table C-8 Register for interrupt status

Read	**Interrupt Status Register**							
Bit #	7	6	5	4	3	2	1	0
BASE + 8H					DI1EN	DI0EN	IDI1EN	IDI0EN
BASE + CH					DI1RF	DI0RF	IDI1RF	IDI0RF
BASE + 10H					DI1F	DI0F	IDI1F	IDI0F

IDI/DI*n*F **Interrupt flag bits (*n* = 0 ~ 1)**

This bit is a flag indicating the status of an interrupt. User can read this bit to get the status of the interrupt

0 No interrupt

1 Interrupt occurred

IDI/DI*n*EN **Interrupt enable control bits (*n* = 0 ~ 1)**

Read this bit to Enable/Disable the interrupt.

0 Disable

1 Enable

IDI/DI*n*RF **Interrupt triggering control bits (*n* = 0 ~ 1)**

The interrupt can be triggered by a rising edge or falling edge of the interrupt signal, as determined by the value in this bit.

0 Rising edge trigger

1 Falling edge trigger

The PCI-1733 ***Interrupt Status Register*** control the status of four interrupt signal sources (IDI0, IDI1, IDI16, IDI17).

Table C-9 Register for interrupt status

Read	**Interrupt Status Register**							
Bit #	7	6	5	4	3	2	1	0
BASE + 8H					IDI17EN	IDI16EN	IDI1EN	IDI0EN
BASE + CH					IDI17RF	IDI16RF	IDI1RF	IDI0RF
BASE + 10H					IDI17F	IDI16F	IDI1F	IDI0F

IDI*n*F **Interrupt flag bits (*n* = 0, 1, 16, 17)**

This bit is a flag indicating the status of an interrupt. User can read this bit to get the status of the interrupt

0 No interrupt

1 Interrupt occurred

IDI*n*EN **Interrupt enable control bits (*n* = 0, 1, 16, 17)**

Read this bit to Enable/Disable the interrupt.

0 Disable

1 Enable

IDI*n*RF **Interrupt triggering control bits (*n* = 0, 1, 16, 17)**

The interrupt can be triggered by a rising edge or falling edge of the interrupt signal, as determined by the value in this bit.

0 Rising edge trigger

1 Falling edge trigger

C.9 Interrupt Control Register — BASE+8H/CH/10H

The PCI-1730 ***Interrupt Control Register*** control the status of four interrupt signal sources (IDI0, IDI1, DI0, DI1). The user can clear the interrupt by writing its corresponding value to the ***Interrupt Control Register***, as shown in below table.

Table C-10 Register for interrupt control

Write	**Interrupt Control Register**							
Bit #	7	6	5	4	3	2	1	0
BASE + 8H					DI1EN	DI0EN	IDI1EN	IDI0EN
BASE + CH					DI1RF	DI0RF	IDI1RF	IDI0RF
BASE + 10H					DI1CLR	DI0CLR	IDI1CLR	IDI0CLR

IDI/DI*n*CLR **Interrupt clear control bits (*n* = 0 ~ 1)**

This bit must first be cleared to service the next interrupt.

0 Don't care

1 Clear the interrupt

IDI/DI*n*EN **Interrupt enable control bits (*n* = 0 ~ 1)**

Read this bit to Enable/Disable the interrupt.

0 Disable

1 Enable

IDI/DI*n*RF **Interrupt triggering control bits (*n* = 0 ~ 1)**

The interrupt can be triggered by a rising edge or falling edge of the interrupt signal, as determined by the value in this bit.

0 Rising edge trigger

1 Falling edge trigger

The PCI-1733 ***Interrupt Control Register*** control the status of four interrupt signal sources (IDI0, IDI1, IDI16, DI17). The user can clear the interrupt by writing its corresponding value to the ***Interrupt Control Register***, as shown in below table.

Table C-11 Register for interrupt control

Write	**Interrupt Control Register**							
Bit #	7	6	5	4	3	2	1	0
BASE + 8H					IDI17EN	IDI16EN	IDI1EN	IDI0EN
BASE + CH					IDI17RF	IDI16RF	IDI1RF	IDI0RF
BASE + 10H					IDI17CLR	IDI16CLR	IDI1CLR	IDI0CLR

IDI*n*CLR **Interrupt clear control bits (*n* = 0, 1, 16, 17)**

This bit must first be cleared to service the next interrupt.

0 Don't care

1 Clear the interrupt

IDI*n*EN **Interrupt enable control bits (*n* =0, 1, 16, 17)**

Read this bit to Enable/Disable the interrupt.

0 Disable

1 Enable

IDI*n*RF **Interrupt triggering control bits (*n* = 0, 1, 16, 17)**

The interrupt can be triggered by a rising edge or falling edge of the interrupt signal, as determined by the value in this bit.

0 Rising edge trigger

1 Falling edge trigger